# DATA SHEET

## Three Phase Induction Motor - Squirrel Cage

| | |
|---|---|
| Customer | : |

| | | | |
|---|---|---|---|
| Product line | : Rolled Steel NEMA Premium Efficiency Three-Phase | Product code : | 12675400 |
| | | Catalog # : | HT001504NPW01 |

| | | | |
|---|---|---|---|
| Frame | : 143/5T | Locked rotor time | : 37s (cold) 21s (hot) |
| Output | : 1.5 HP (1.1 kW) | Temperature rise | : 80 K |
| Poles | : 4 | Duty cycle | : Cont.(S1) |
| Frequency | : 60 Hz | Ambient temperature | : -20°C to +40°C |
| Rated voltage | : 575 V | Altitude | : 1000 m.a.s.l. |
| Rated current | : 1.62 A | Protection degree | : IP55 |
| L. R. Amperes | : 13.3 A | Cooling method | : IC411 - TEFC |
| LRC | : 8.2x(Code K) | Mounting | : F-1 |
| No load current | : 0.867 A | Rotation¹ | : Both (CW and CCW) |
| Rated speed | : 1750 rpm | Noise level² | : 52.0 dB(A) |
| Slip | : 2.78 % | Starting method | : Direct On Line |
| Rated torque | : 4.50 ft.lb | Approx. weight³ | : 38.3 lb |
| Locked rotor torque | : 270 % | | |
| Breakdown torque | : 300 % | | |
| Insulation class | : F | | |
| Service factor | : 1.15 | | |
| Moment of inertia (J) | : 0.1101 sq.ft.lb | | |
| Design | : B | | |

| Output | 50% | 75% | 100% |
|---|---|---|---|
| Efficiency (%) | 85.5 | 86.5 | 86.5 |
| Power Factor | 0.59 | 0.72 | 0.79 |

| Foundation loads | |
|---|---|
| Max. traction | : 98 lb |
| Max. compression | : 136 lb |

| | | Drive end | Non drive end |
|---|---|---|---|
| Bearing type | : | 6205 ZZ | 6203 ZZ |
| Sealing | : | V'Ring | V'Ring |
| Lubrication interval | : | - | - |
| Lubricant amount | : | - | - |
| Lubricant type | : | Mobil Polyrex EM | |

Notes

This revision replaces and cancel the previous one, which must be eliminated.
(1) Looking the motor from the shaft end.
(2) Measured at 1m and with tolerance of +3dB(A).
(3) Approximate weight subject to changes after manufacturing process.
(4) At 100% of full load.

These are average values based on tests with sinusoidal power supply, subject to the tolerances stipulated in NEMA MG-1.

| Rev. | Changes Summary | Performed | Checked | Date |
|---|---|---|---|---|
| | | | | |

| | | | | |
|---|---|---|---|---|
| Performed by | | | | |
| Checked by | | | Page | Revision |
| Date | 13/11/2020 | | 1 / 6 | |

This document is exclusive property of WEG S/A. Reprinting is not allowed without written authorization of WEG S/A.
Subject to change without notice

# TORQUE AND CURRENT VS SPEED CURVE

## Three Phase Induction Motor - Squirrel Cage

| | | | |
|---|---|---|---|
| Customer | : | | |
| Product line | : Rolled Steel NEMA Premium Efficiency Three-Phase | Product code : | 12675400 |
| | | Catalog # : | HT001504NPW01 |

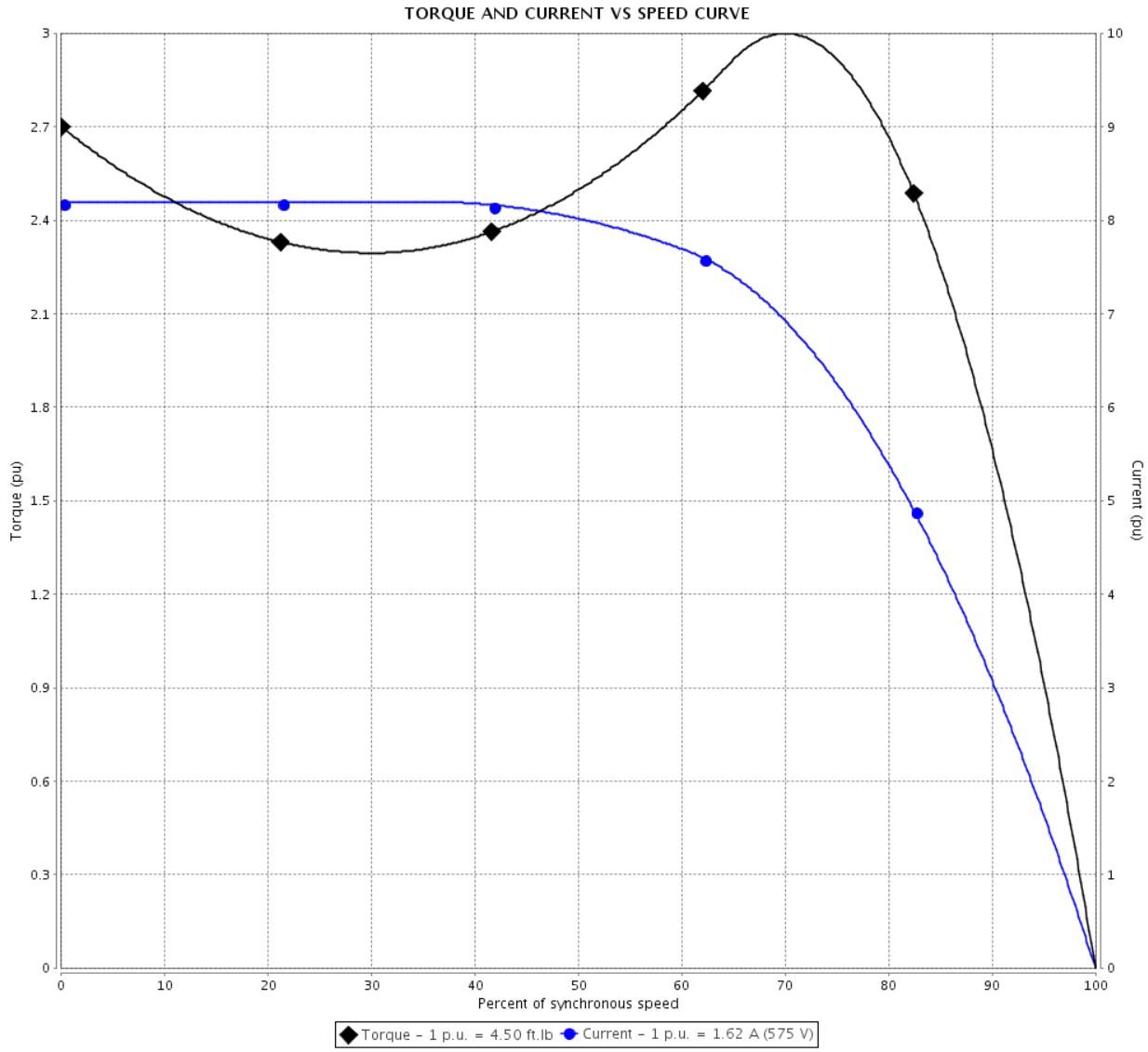


| | | | |
|---|---|---|---|
| Performance | : 575 V 60 Hz 4P | | |
| Rated current | : 1.62 A | Moment of inertia (J) | : 0.1101 sq.ft.lb |
| LRC | : 8.2 | Duty cycle | : Cont.(S1) |
| Rated torque | : 4.50 ft.lb | Insulation class | : F |
| Locked rotor torque | : 270 % | Service factor | : 1.15 |
| Breakdown torque | : 300 % | Temperature rise | : 80 K |
| Rated speed | : 1750 rpm | Design | : B |
| Locked rotor time | : 37s (cold) 21s (hot) | | |

| Rev. | Changes Summary | Performed | Checked | Date |
|---|---|---|---|---|
| | | | | |

| | | | | |
|---|---|---|---|---|
| Performed by | | | | |
| Checked by | | | Page | Revision |
| Date | 13/11/2020 | | 2 / 6 | |

This document is exclusive property of WEG S/A. Reprinting is not allowed without written authorization of WEG S/A.
Subject to change without notice

# LOAD PERFORMANCE CURVE

## Three Phase Induction Motor - Squirrel Cage

| | |
|---|---|
| Customer | : |

| | | | |
|---|---|---|---|
| Product line | : Rolled Steel NEMA Premium Efficiency Three-Phase | Product code : | 12675400 |
| | | Catalog # : | HT001504NPW01 |

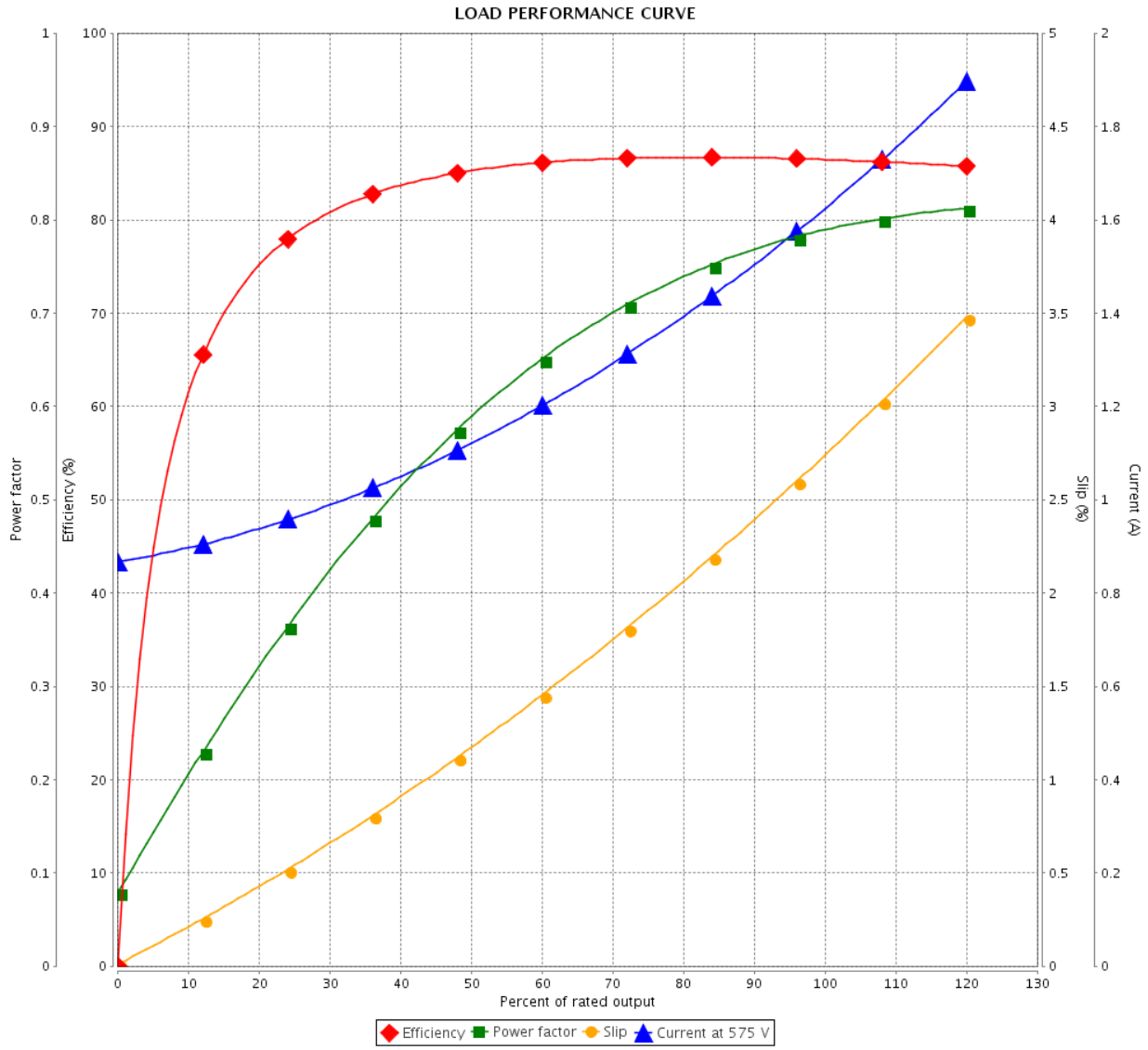


| | |
|---|---|
| Performance | : 575 V 60 Hz 4P |

| | | | |
|---|---|---|---|
| Rated current | : 1.62 A | Moment of inertia (J) | : 0.1101 sq.ft.lb |
| LRC | : 8.2 | Duty cycle | : Cont.(S1) |
| Rated torque | : 4.50 ft.lb | Insulation class | : F |
| Locked rotor torque | : 270 % | Service factor | : 1.15 |
| Breakdown torque | : 300 % | Temperature rise | : 80 K |
| Rated speed | : 1750 rpm | Design | : B |

| Rev. | Changes Summary | Performed | Checked | Date |
|---|---|---|---|---|
| | | | | |

| | | | | |
|---|---|---|---|---|
| Performed by | | | | |
| Checked by | | | Page | Revision |
| Date | 13/11/2020 | | 3 / 6 | |

This document is exclusive property of WEG S/A. Reprinting is not allowed without written authorization of WEG S/A.
Subject to change without notice

# THERMAL LIMIT CURVE

## Three Phase Induction Motor - Squirrel Cage

| | | | |
|---|---|---|---|
| Customer | : | | |
| Product line | : Rolled Steel NEMA Premium Efficiency Three-Phase | Product code : | 12675400 |
| | | Catalog # : | HT001504NPW01 |

| | | | |
|---|---|---|---|
| Performance | : 575 V 60 Hz 4P | | |
| Rated current | : 1.62 A | Moment of inertia (J) | : 0.1101 sq.ft.lb |
| LRC | : 8.2 | Duty cycle | : Cont.(S1) |
| Rated torque | : 4.50 ft.lb | Insulation class | : F |
| Locked rotor torque | : 270 % | Service factor | : 1.15 |
| Breakdown torque | : 300 % | Temperature rise | : 80 K |
| Rated speed | : 1750 rpm | Design | : B |
| Heating constant | | | |
| Cooling constant | | | |

| Rev. | Changes Summary | Performed | Checked | Date |
|---|---|---|---|---|
| | | | | |

| | | | | |
|---|---|---|---|---|
| Performed by | | | | |
| Checked by | | | Page | Revision |
| Date | 13/11/2020 | | 4 / 6 | |

This document is exclusive property of WEG S/A. Reprinting is not allowed without written authorization of WEG S/A.
Subject to change without notice

# THERMAL LIMIT CURVE

## Three Phase Induction Motor - Squirrel Cage

Customer :

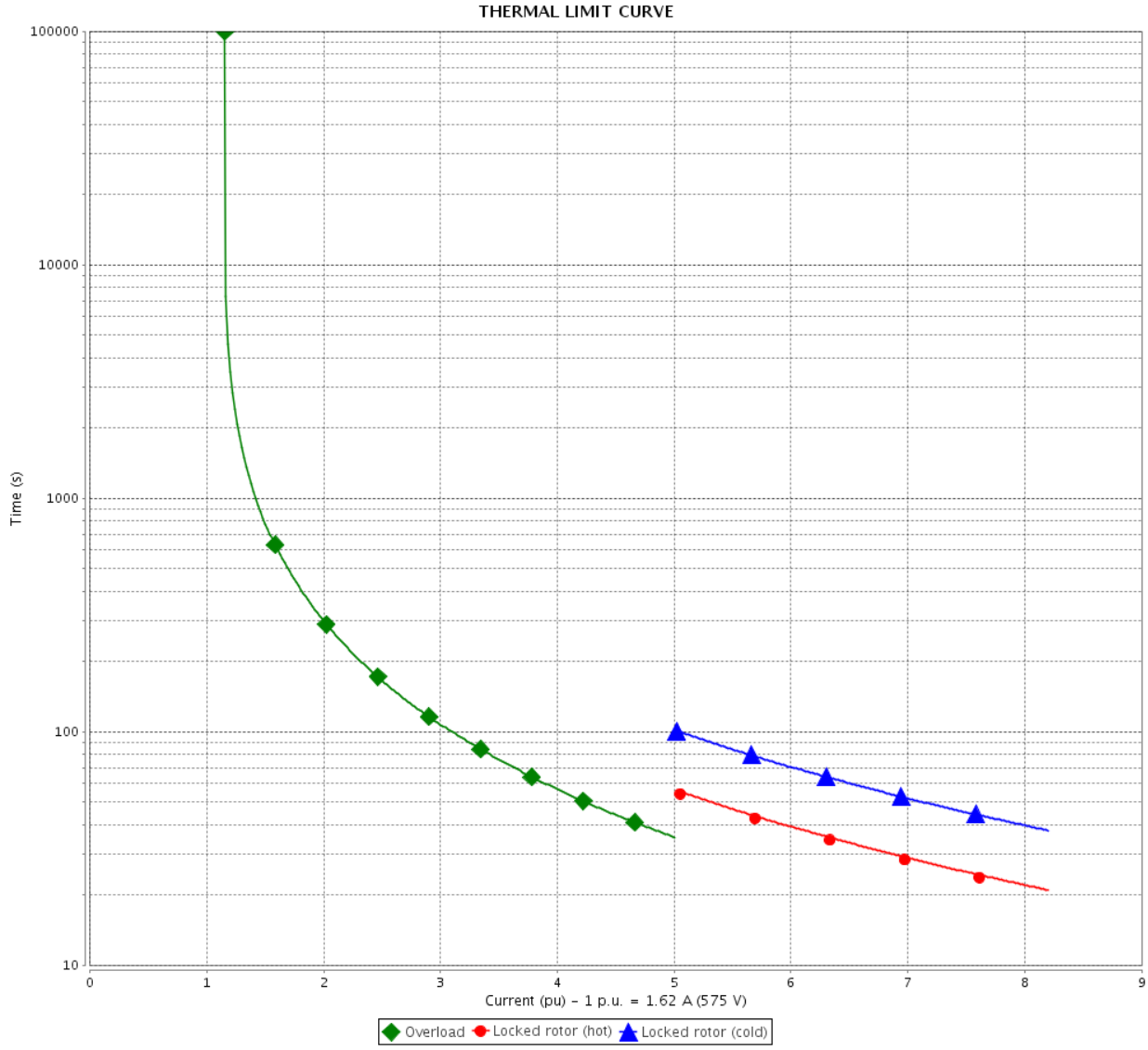


| Rev. | Changes Summary | Performed | Checked | Date |
|---|---|---|---|---|
| | | | | |

| | | | | |
|---|---|---|---|---|
| Performed by | | | | |
| Checked by | | | Page | Revision |
| Date | 13/11/2020 | | 5 / 6 | |

This document is exclusive property of WEG S/A. Reprinting is not allowed without written authorization of WEG S/A.
Subject to change without notice

# VFD OPERATION CURVE

## Three Phase Induction Motor - Squirrel Cage

| | | | |
|---|---|---|---|
| Customer | : | | |
| Product line | : Rolled Steel NEMA Premium Efficiency Three-Phase | Product code : | 12675400 |
| | | Catalog # : | HT001504NPW01 |

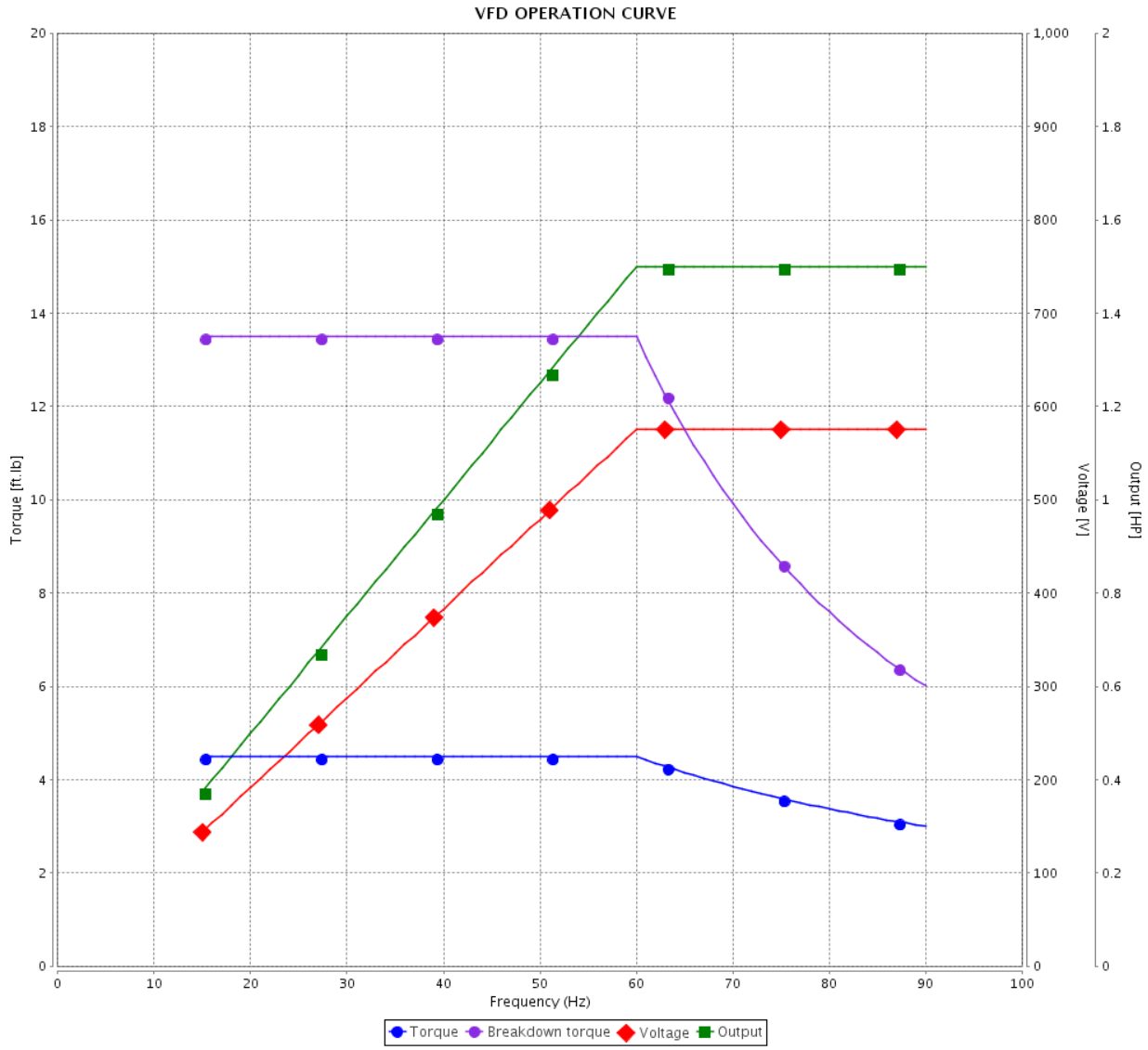


| | | | |
|---|---|---|---|
| Performance | : 575 V 60 Hz 4P | | |
| Rated current | : 1.62 A | Moment of inertia (J) | : 0.1101 sq.ft.lb |
| LRC | : 8.2 | Duty cycle | : Cont.(S1) |
| Rated torque | : 4.50 ft.lb | Insulation class | : F |
| Locked rotor torque | : 270 % | Service factor | : 1.15 |
| Breakdown torque | : 300 % | Temperature rise | : 80 K |
| Rated speed | : 1750 rpm | Design | : B |

| Rev. | Changes Summary | Performed | Checked | Date |
|---|---|---|---|---|
| | | | | |

| | | | | |
|---|---|---|---|---|
| Performed by | | | | |
| Checked by | | | Page | Revision |
| Date | 13/11/2020 | | 6 / 6 | |

This document is exclusive property of WEG S/A. Reprinting is not allowed without written authorization of WEG S/A.
Subject to change without notice

No reproduction of this drawing is allowed written permission of WEG Motores

| EIXO | |
|---|---|
| PADRÃO | X |
| OPCIONAL | |
| ESPECIAL | |

Dimensões em polegada
Dimensions in inches

THIS IS AN UPDATED REVISION, THE PREVIOUS ONE MUST BE DISREGARDED.

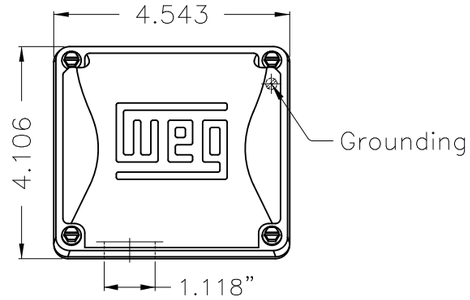


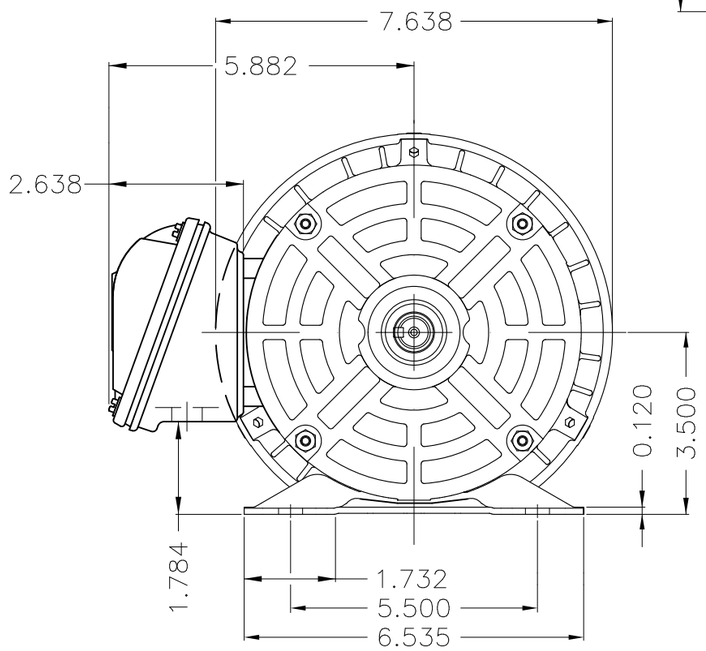


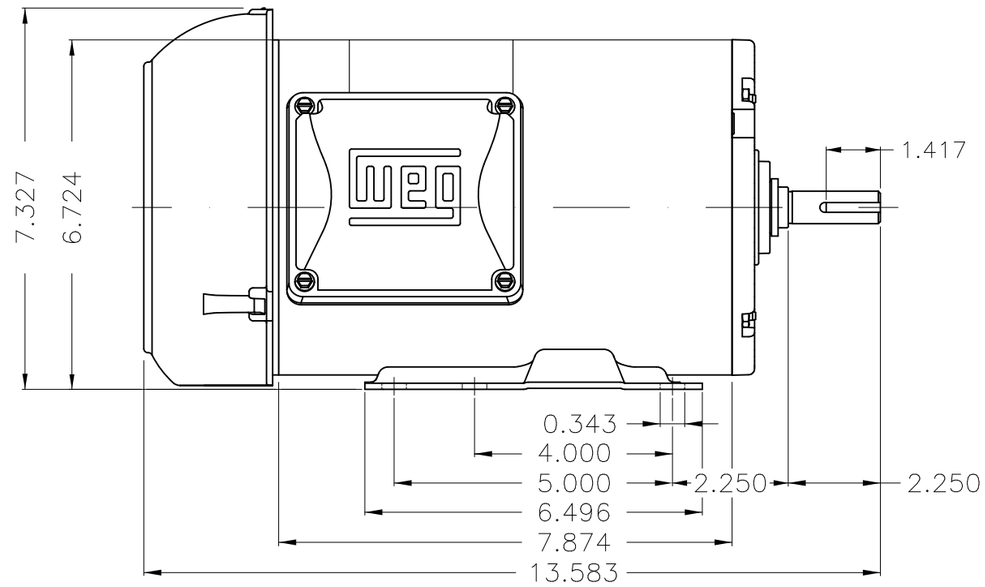


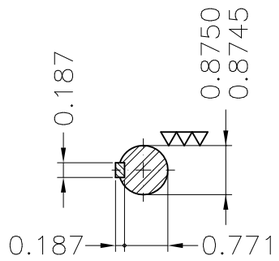


DE Shaft End

Color Munsell N 1 matte black
Painting plan 207N
Mounting F-1/B3R(D)

| ECM | LOC | SUMMARY OF MODIFICATIONS | EXECUTED | CHECKED | RELEASED | DATE | VER |
|---|---|---|---|---|---|---|---|
| | | | | | | | |
| | | | | | | | |

| | | | |
|---|---|---|---|
| EXECUTED | USERADMIN | THREE P. MOTOR CLOS ROLLED STEEL NEMA PREM | |
| CHECKED | | FRAME 143/5T IP55 TEFC | |
| RELEASED | | WEG code: 12675400 | |
| REL DT | 13.11.2020 | WMO | Jaragua do Sul | Product Engineering | SHEET 1 / 1 |

1.5 HP 04 Poles 60Hz

A

ZME A3

WEG's property. Forbidden reproduction without previous authorization.